The International Standard

BARIENT

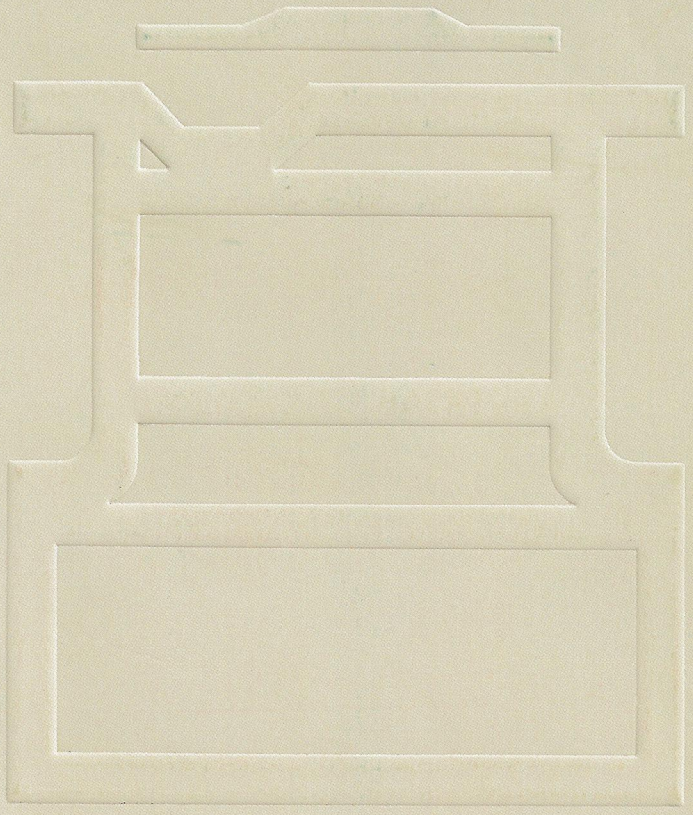

BARIENT WINCHES: THE BEST IS GETTING BETTER!

We are happy to introduce several new products in this catalog, as well as many significant product improvements. We have dramatically improved the efficiency, serviceability, and strength of our smaller winch range.

All of our new and improved products can be completely disassembled for servicing while bolted to the deck or mast. In fact, all Barient winches in this catalog can be completely serviced from "top down" (with the sole exception of the #25).

We are now making more extensive use of our forging capability. Most drums, bases, gear housings, and gears in our winches from size #27 and down incorporate forgings rather than castings. Forgings are stronger than castings, with significantly less porosity. Less porosity shows up in the finished product as an improved finish for chrome plated bronze and anodized aluminum products. In addition, for the traditionalist, polished bronze drums will resist corrosion much better than cast bronze drums.

POWER RATIO VS. EFFICIENCY

All winch manufacturers list "Power Ratio" in their specifications. Power ratio calculates theoretical mechanical advantage. The key word is *theoretical*. If a winch with a power ratio of 20:1 were 100% efficient, then 10 pounds of force on a handle would produce 200 pounds of pull. However, due to friction, no winch is 100% efficient. The best way to reduce friction (and thus improve efficiency) is to replace metal-to-metal sliding contact with roller bearings. This is what has been done to many of the new and improved winches featured in this catalog. As a result we find it necessary to define the *power* derived from a winch in a new way.

Normally, Power Ratio is calculated as follows:

$$\text{Power Ratio} = \frac{2 \times \text{length of handle}}{\text{drum diameter}} \times \text{gear ratio}$$

Power ratio, because of losses from friction, does not tell you how much a winch will pull.

POWER ADVANTAGE RATING

Enter **Power Advantage Rating** (PAR). PAR obsoletes Power Ratio. You can't calculate PAR, you must measure it! Barient invented PAR through necessity. We found that the improved and new designs were pulling more than older models, even when they had identical Power Ratios.

PAR, at long last, gives you a realistic way to evaluate a winch's true output. PAR is not theoretical. It is an actual number determined by test. The PAR number tells you that if you apply 100 pounds of force to a 10-inch handle, you will be able to pull the PAR number of the winch in pounds. If 50 pounds is applied to the handle, you will get one-half of the PAR number output.

PAR values are determined in the Barient laboratory by measuring the actual output force developed by each winch as it is subjected to a 100-pound pull on a 10-inch winch handle. The rope used is wire, instead of line, to attain the best repeatability. The amount of tailing force is subtracted from the output readings to equalize standard and self-tailing winch values.

Please refer to the Barient Winch Guide for assistance in selecting the proper size Barient winch for your particular need. In addition to the winch guide, we have provided a simple formula to assist you in calculating the actual size sheet loads on your particular yacht. This information, when combined with PAR, should be most useful (see pages 8 and 9).

LINE ENTRY HEIGHT

In this catalog we are introducing a new dimensional specification to assist you in planning deck layouts, sheet leads, etc. The new specification is Line Entry Height. This dimension locates the lowest point on the winch where the line comes into contact with the drum.

Photo by Douglas Keachie

THE BARIENT SELF-TAILING WINCH

Barient has been manufacturing self-tailing winches since 1974, and many improvements have been made to our original self-tailing mechanism. Our current self-tailing winches are versatile, simple to use, and extremely reliable.

The advantage of self-tailing is important to racing crews and cruising sailors alike. With a standard winch, one crew member must crank with one hand and tail with the other. With a self-tailing winch the same crewman can crank with both hands and upper body, letting the winch tail itself.

The jaws of a self-tailer take the place of a human hand. They grip the line firmly enough to prevent it from falling out, while at the same time allowing the line to move around the jaws from the feeder to the stripper without building friction.

When we patented our self-tailing mechanism back in 1976, we were free to choose among many designs: wave-shaped, V-shaped, and serrated fixed jaws, rubber jaws, and spring-loaded mechanisms. After much developing and testing, we chose the spring-loaded principle. We found it to be the only method that worked satisfactorily in the varied, real-life environment of a yacht under sail.

All other self-tailing mechanisms employed today by other manufacturers utilize designs which we rejected. And because of our patent, we are the only manufacturer to make available the spring-loaded design.

For a self-tailing mechanism to work efficiently, the "feed rate" from the drum through the self-tailing mechanism must be constant. In other words, the jaws must be able to accept and forward the line at exactly the same rate that it comes from the drum. If the drum feeds line faster than the jaws can take it up, the line will spill out. And if the jaws take up line faster than the drum feeds it, friction builds up, efficiency falls off, and sheet wear increases.

From an engineering point of view, a constant feed rate can be achieved only if the center of the line on the drum is in vertical alignment with the center of the line in the tailing mechanism. Barient's self-tailing winches achieve this critical alignment with a variety of line sizes within the range of the winch.

An example of the limitation shared by many fixed-jaw mechanisms is the "V-shaped" design. The V-shaped jaws allow just one size line to be in vertical alignment on both drum and self-tailing mechanism. When the line size is increased, the line in the mechanism loses its vertical alignment with the line on the drum. The effective diameter of the two parts of the winch becomes unequal, as does the feed rate; friction is created and efficiency is lost. If the line size is decreased, the jaws will not grip the line tightly enough to keep it from slipping and falling out.

Although parallel-jawed self-tailing winches can achieve constant feed rate, the jaw opening must be mechanically changed with each change in line size. This is done by adjusting spacers inside the drum.

Barient manufactures the only self-tailing winch that automatically provides perfect self-tailing alignment for different line sizes.

7STA Aluminum

8P Chrome

10P Chrome

10 Chrome

12 Chrome

18 Chrome

17ST Chrome

MODEL 7STA
HEIGHT
3¼″ 83 mm
DRUM DIA
2⁹⁄₁₆″ 65 mm
MAX DIA
4¹³⁄₁₆″ 111 mm
LINE ENTRY HGT
1⅛″ 29 mm
POWER ADVANTAGE RATING
625
GEAR RATIO
1:1
POWER RATIO
7.8:1
WEIGHT
2¼ lb 1 kg alum
LINE SIZE RANGE
⅜″ (fixed jaw mechanism)
10 mm
MOUNTING
Bolt Circle Dia 3″ 76 mm
Fasteners 3 flathead ¼″
6 mm

MODEL 8P
HEIGHT
3³⁄₁₆″ 81 mm
DRUM DIA
2½″ 65 mm
MAX DIA
3¹¹⁄₁₆″ 94 mm
LINE ENTRY HGT
1¼″ 32 mm
POWER ADVANTAGE RATING
625
GEAR RATIO
1:1
POWER RATIO
7.9:1
WEIGHT
1⅝ lb .74 kg alum
3¼ lb 1.48 kg chr or brz
MOUNTING
Bolt Circle Dia 2⅝″ 66 mm
Fasteners 4 flathead ¼″
6 mm

MODEL 10P
HEIGHT
3¾″ 95 mm
DRUM DIA
2⅝″ 67 mm
MAX DIA
4⅝″ 110 mm
LINE ENTRY HGT
1⅜″ 35 mm
POWER ADVANTAGE RATING
600
GEAR RATIO
1:1
POWER RATIO
7.6:1
WEIGHT
2¼ lb 1 kg alum
3⅞ lb 1.76 kg chr or brz
MOUNTING
Bolt Circle Dia 3⁵⁄₃₂″ 80 mm
Fasteners 5 flathead ¼″
6 mm

MODEL 10
HEIGHT
3¾″ 95 mm
DRUM DIA
2⅝″ 67 mm
MAX DIA
4⅜″ 110 mm
LINE ENTRY HGT
1⅜″ 35 mm
POWER ADVANTAGE RATING
675
GEAR RATIO
1:1
POWER RATIO
7.6:1
WEIGHT
3¼ lb 1.5 kg alum
5¼ lb 2.4 kg chr or brz
MOUNTING
Bolt Circle Dia 3⁵⁄₃₂″ 80 mm
Fasteners 5 roundhead/hex
head ¼″ 6 mm

MODEL 12
HEIGHT
4¹¹⁄₁₆″ 119 mm
DRUM DIA
2⅞″ 73 mm
MAX DIA
5¼″ 113 mm
LINE ENTRY HGT
1¾″ 44 mm
POWER ADVANTAGE RATING
600
GEAR RATIO
1:1
POWER RATIO
7:1
WEIGHT
5½ lb 2.5 kg alum
9¼ lb 4.2 kg chr or brz
MOUNTING
Bolt Circle Dia 4″ 102 mm
Fasteners 6 flathead ⁵⁄₁₆″
8 mm

MODEL 18
HEIGHT
4⅜″ 111 mm
DRUM DIA
3¹⁄₁₆″ 77 mm
MAX DIA
5¼″ 132 mm
LINE ENTRY HGT
1⅞″ 48 mm
POWER ADVANTAGE RATING
1650
GEAR RATIO
1:1 1st
3.6:1 2d
POWER RATIO
6.6:1 1st
24:1 2d
WEIGHT
6⅛ lb 2.78 kg alum
9¼ lb 4.2 kg chr or brz
MOUNTING
Bolt Circle Dia 3⅜″ 86 mm
Fasteners 5 roundhead/hex
head ¼″ 6 mm

MODEL 17ST
HEIGHT
6¼″ 158 mm
DRUM DIA
3″ 76 mm
MAX DIA
5³⁄₁₆″ 131 mm
LINE ENTRY HGT
1¾″ 48 mm
POWER ADVANTAGE RATING
1300
GEAR RATIO
2.4:1
POWER RATIO
16:1
WEIGHT
9 lb 4.1 kg alum
12¾ lb 5.8 kg chr or brz
LINE SIZE RANGE
⁵⁄₁₆″ - ½″ 8 - 13 mm
MOUNTING
Bolt Circle Dia 3⅜″ 86 mm
Fasteners 5 roundhead/hex
head ¼″ 6 mm

21 Chrome | 22 Chrome | 19ST Chrome | 24 Chrome | 25 Chrome | 23ST Chrome

MODEL 21
HEIGHT
5 9/16″ 141 mm
DRUM DIA
3″ 79 mm
MAX DIA
5 3/4″ 146 mm
LINE ENTRY HGT
2 5/8″ 67 mm
POWER ADVANTAGE RATING
1850
GEAR RATIO
1:1 1st
4.5:1 2d
POWER RATIO
6.7:1 1st
30:1 2d
WEIGHT
8 3/4 lb 3.98 kg alum
13 lb 5.9 kg chr or brz
MOUNTING
Bolt Circle Dia 4 3/8″ 111 mm
Fasteners 6 flathead 5/16″
8 mm

MODEL 22
HEIGHT
5 9/16″ 136 mm
DRUM DIA
3 3/16″ 81 mm
MAX DIA
5 3/4″ 146 mm
LINE ENTRY HGT
2 5/8″ 67 mm
POWER ADVANTAGE RATING
2100
GEAR RATIO
1:1 1st
5.4:1 2d
POWER RATIO
6.3:1 1st
34:1 2d
WEIGHT
9 lb 4.1 kg alum
13 1/2 lb 6.1 kg chr or brz
MOUNTING
Bolt Circle Dia 4 3/8″ 111 mm
Fasteners 6 flathead 5/16″
8 mm

MODEL 19ST
HEIGHT
7″ 178 mm
DRUM DIA
3″ 76 mm
MAX DIA
5 3/4″ 145 mm
LINE ENTRY HGT
2 3/4″ 70 mm
POWER ADVANTAGE RATING
2000
GEAR RATIO
2.3:1 1st
5.3:1 2d
POWER RATIO
15.3:1 1st
35.3:1 2d
WEIGHT
11 3/4 lb 5.3 kg alum
16 1/4 lb 7.4 kg chr or brz
LINE SIZE RANGE
5/16″ - 1/2″ 8 - 13 mm
MOUNTING
Bolt Circle Dia 4 3/8″ 111 mm
Fasteners 6 flathead 5/16″
8 mm

MODEL 24
HEIGHT
6″ 152 mm
DRUM DIA
3″ 76 mm
MAX DIA
6 9/16″ 167 mm
LINE ENTRY HGT
3 1/8″ 79 mm
POWER ADVANTAGE RATING
2900
GEAR RATIO
1:1 1st
6:1 2d
POWER RATIO
6.7:1 1st
40:1 2d
WEIGHT
12 1/4 lb 5.6 kg alum
18 3/4 lb 8.5 kg chr or brz
MOUNTING
Bolt Circle Dia 5 1/2″ 140 mm
Fasteners 6 flathead 5/16″
8 mm

MODEL 25
HEIGHT
6 15/32″ 164 mm
DRUM DIA
3 1/2″ 89 mm
MAX DIA
6 3/4″ 172 mm
LINE ENTRY HGT
3 1/8″ 79 mm
POWER ADVANTAGE RATING
2300
GEAR RATIO
1:1 1st
7.75:1 2d
POWER RATIO
5.7:1 1st
44:1 2d
WEIGHT
11.8 lb 5.3 kg alum
17 lb 7.7 kg chr or brz
MOUNTING
Bolt Circle Dia 5 1/2″ 140 mm
Fasteners 5 flathead 5/16″
8 mm

MODEL 23ST
HEIGHT
7 9/16″ 192 mm
DRUM DIA
3″ 76 mm
MAX DIA
6 9/16″ 165 mm
LINE ENTRY HGT
2 7/8″ 73 mm
POWER ADVANTAGE RATING
2900
GEAR RATIO
2.4:1 1st
6.3:1 2d
POWER RATIO
14.6:1 1st
42:1 2d
WEIGHT
16 1/4 lb 7.4 kg alum
21 1/4 lb 9.6 kg chr or brz
LINE SIZE RANGE
3/8″ - 9/16″ 10 - 14 mm
MOUNTING
Bolt Circle Dia 5 1/2″ 140 mm
Fasteners 5 flathead 5/16″
8 mm

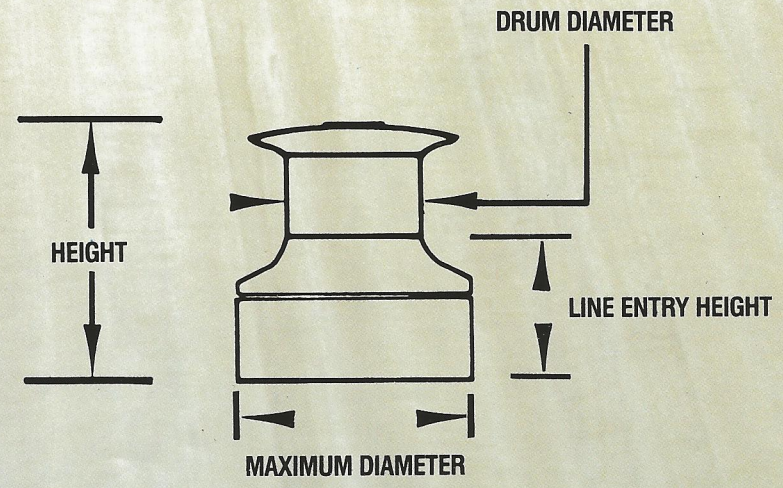

27 Chrome

27ST Chrome

28 Chrome

28ST Aluminum

32 Stainless Steel

MODEL 27
HEIGHT
6 15/16″ 176 mm
DRUM DIA
3 3/4″ 95 mm
MAX DIA
7 1/2″ 190 mm
LINE ENTRY HGT
3 5/8″ 92 mm
POWER ADVANTAGE RATING
2900
GEAR RATIO
2:1 1st
8.4:1 2d
POWER RATIO
10.8:1 1st
44.6:1 2d
WEIGHT
18 3/4 lb 8.5 kg alum
28 1/2 lb 12.9 kg chr or brz
MOUNTING
Bolt Circle Dia 5 5/8″ 143 mm
Fasteners 5 roundhead/hex head
3/8″ 9.5 mm

MODEL 27ST
HEIGHT
8 3/16″ 208 mm
DRUM DIA
3 3/4″ 95 mm
MAX DIA
7 5/16″ 188 mm
LINE ENTRY HGT
3 5/8″ 92 mm
POWER ADVANTAGE RATING
2900
GEAR RATIO
2:1 1st
8.4:1 2d
POWER RATIO
10.8:1 1st
44.6:1 2d
WEIGHT
19 1/2 lb 8.9 kg alum
27 1/4 lb 12.4 kg chr or brz
LINE SIZE RANGE
3/8″ - 9/16″ 10 - 14 mm
MOUNTING
Bolt Circle Dia 5 5/8″ 143 mm
Fasteners 5 roundhead/hex head
3/8″ 9.5 mm

MODEL 28
HEIGHT
7 13/16″ 198 mm
DRUM DIA
4″ 102 mm
MAX DIA
8″ 203 mm
LINE ENTRY HGT
3 7/8″ 98 mm
POWER ADVANTAGE RATING
3100
GEAR RATIO
2.5:1 1st
7.4:1 2d
POWER RATIO
12.8:1 1st
37.7:1 2d
WEIGHT
21 lb 9.5 kg alum
29 lb 11.4 kg chr or brz
29 lb 11.4 kg stainless
MOUNTING
Bolt Circle Dia 6 3/8″ 162 mm
Fasteners 6 flathead 3/8″ 10 mm

MODEL 28ST
HEIGHT
9 1/8″ 232 mm
DRUM DIA
4″ 102 mm
MAX DIA
8″ 203 mm
LINE ENTRY HGT
3 7/8″ 98 mm
POWER ADVANTAGE RATING
3100
GEAR RATIO
2.5:1 1st
7.4:1 2d
POWER RATIO
12.8:1 1st
37.7:1 2d
WEIGHT
24 1/2 lb 11.1 kg alum
30 lb 13.6 kg chr or brz
30 lb 13.6 kg stainless
LINE SIZE RANGE
7/16″ - 5/8″ 11 - 16 mm
MOUNTING
Bolt Circle Dia 6 3/8″ 162 mm
Fasteners 6 flathead 3/8″ 10 mm

MODEL 32
HEIGHT
8 7/8″ 225 mm
DRUM DIA
4 3/4″ 121 mm
MAX DIA
9 1/2″ 241 mm
LINE ENTRY HGT
4″ 102 mm
POWER ADVANTAGE RATING
3950
GEAR RATIO
2.4:1 1st
11:1 2d
POWER RATIO
10.2:1 1st
47:1 2d
WEIGHT
32 lb 14.5 kg alum
45.5 lb 20.7 kg chr or brz
45.5 lb 20.7 kg stainless
MOUNTING
Bolt Circle Dia 7 3/4″ 197 mm
Fasteners 6 flathead 3/8″ 10 mm

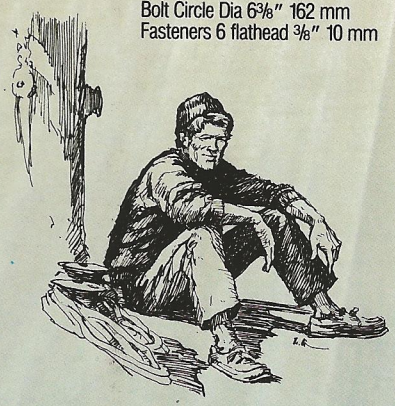

32ST Chrome

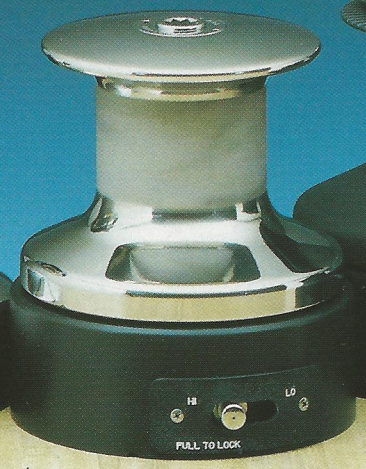

32-3 Stainless Steel

32-3ST Aluminum

632 Aluminum

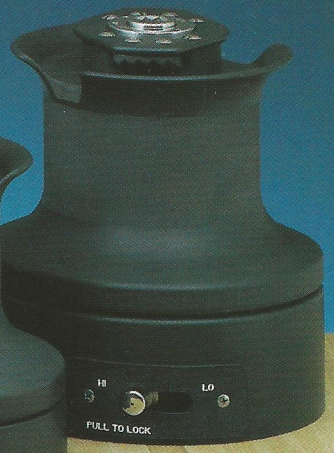

632-3 Aluminum

MODEL 32ST
HEIGHT
10″ 254 mm
DRUM DIA
4¾″ 121 mm
MAX DIA
9½″ 241 mm
LINE ENTRY HGT
4″ 102 mm
POWER ADVANTAGE RATING
3950
GEAR RATIO
2.4:1 1st
11.1:1 2d
POWER RATIO
10.2:1 1st
47:1 2d
WEIGHT
33.5 lb 15.2 kg alum
45 lb 20.5 kg chr or brz
45 lb 20.5 kg stainless
LINE SIZE RANGE
½″ - ¾″ 13 - 19 mm
MOUNTING
Bolt Circle Dia 7¾″ 197 mm
Fasteners 6 flathead ⅜″ 10 mm

MODEL 32-3
HEIGHT
10⅝″ 270 mm
DRUM DIA
4¾″ 121 mm
MAX DIA
9½″ 241 mm
LINE ENTRY HGT
5¾″ 146 mm
POWER ADVANTAGE RATING
3950
GEAR RATIO
1.7:1 1st
4.9:1 2d
11.4:1 3d
POWER RATIO
7.2:1 1st
20.7:1 2d
47.8:1 3d
WEIGHT
36 lb 16.4 kg alum
45 lb 20.7 kg chr or brz
45 lb 20.7 kg stainless
MOUNTING
Bolt Circle Dia 7¾″ 197 mm
Fasteners 6 roundhead/hex head
⅜″ 10 mm

MODEL 32-3ST
HEIGHT
11¾″ 298 mm
DRUM DIA
4¾″ 121 mm
MAX DIA
9½″ 241 mm
LINE ENTRY HGT
5¾″ 146 mm
POWER ADVANTAGE RATING
3950
GEAR RATIO
1.7:1 1st
4.9:1 2d
11.4:1 3d
POWER RATIO
7.2:1 1st
20.7:1 2d
47.8:1 3d
WEIGHT
37.5 lb 17 kg alum
49 lb 22.3 kg chr or brz
49 lb 22.3 kg stainless
LINE SIZE RATING
½″ - ¾″ 13 - 19 mm
MOUNTING
Bolt Circle Dia 7¾″ 197 mm
Fasteners 6 roundhead/hex head
⅜″ 10 mm

MODEL 632
HEIGHT
8⅞″ 225 mm
DRUM DIA
6″ 152 mm
MAX DIA
9½″ 241 mm
LINE ENTRY HGT
3¾″ 95 mm
POWER ADVANTAGE RATING
3300
GEAR RATIO
2.4:1 1st
11:1 2d
POWER RATIO
8:1 1st
37.2:1 2d
WEIGHT
35 lb 15.9 kg alum
MOUNTING
Bolt Circle Dia 7¾″ 197 mm
Fasteners 6 flathead ⅜″ 10 mm

MODEL 632-3
HEIGHT
10⅝″ 270 mm
DRUM DIA
6″ 152 mm
MAX DIA
9½″ 241 mm
LINE ENTRY HGT
5½″ 140 mm
POWER ADVANTAGE RATING
3300
GEAR RATIO
1.7:1 1st
4.9:1 2d
11.4:1 3d
POWER RATIO
5.7:1 1st
16.4:1 2d
37.9:1 3d
WEIGHT
39 lb 17.7 kg alum
MOUNTING
Bolt Circle Dia 7¾″ 197 mm
Fasteners 6 roundhead/hex head
⅜″ 10 mm

36 Stainless Steel

36ST Chrome

36-3 Aluminum

36-3ST Aluminum

MODEL 36
HEIGHT
11¼″ 286 mm
DRUM DIA
5¾″ 146 mm
MAX DIA
10⅛″ 257 mm
LINE ENTRY HGT
6⅛″ 156 mm
POWER ADVANTAGE RATING
5700
GEAR RATIO
6.4:1 1st
19.4:1 2d
POWER RATIO
22.5:1 1st
68.2:1 2d
WEIGHT
44 lb 20 kg alum
58.5 lb 26.5 kg stainless
MOUNTING
Bolt Circle Dia 8½″ 216 mm
Fasteners 6 flathead ½″ 12 mm

MODEL 36ST
HEIGHT
12 7/16″ 316 mm
DRUM DIA
5¾″ 146 mm
MAX DIA
10⅛″ 257 mm
LINE ENTRY HGT
6⅛″ 156 mm
POWER ADVANTAGE RATING
5700
GEAR RATIO
6.4:1 1st
19.4:1 2d
POWER RATIO
22.5:1 1st
68.2:1 2d
WEIGHT
48 lb 21.8 kg alum
63.5 lb 28.9 kg chr or brz
63.5 lb 28.9 kg stainless
LINE SIZE RANGE
½″ - ¾″ 13 - 19 mm
MOUNTING
Bolt Circle Dia 8½″ 216 mm
Fasteners 6 flathead ½″ 12 mm

MODEL 36-3
HEIGHT
11¼″ 286 mm
DRUM DIA
5¾″ 146 mm
MAX DIA
10⅛″ 257 mm
LINE ENTRY HGT
6⅛″ 156 mm
POWER ADVANTAGE RATING
5700
GEAR RATIO
2:1 1st
6.4:1 2d
19.4:1 3d
POWER RATIO
7:1 1st
22.5:1 2d
68.2:1 3d
WEIGHT
46 lb 20.9 kg alum
60.5 lb 27.5 kg stainless
MOUNTING
Bolt Circle Dia 8½″ 216 mm
Fasteners 6 flathead ½″ 12 mm

MODEL 36-3ST
HEIGHT
12 7/16″ 316 mm
DRUM DIA
5¾″ 146 mm
MAX DIA
10⅛″ 257 mm
LINE ENTRY HGT
6⅛″ 156 mm
POWER ADVANTAGE RATING
5700
GEAR RATIO
2:1 1st
6.4:1 2d
19.4:1 3d
POWER RATIO
7:1 1st
22.5:1 2d
68.2:1 3d
WEIGHT
50 lb 22.7 kg alum
65.5 lb 29.7 kg stainless
LINE SIZE RATING
½″ - ¾″ 13 - 19 mm
MOUNTING
Bolt Circle Dia 8½″ 216 mm
Fasteners 6 flathead ½″ 12 mm

736 Stainless Steel/Aluminum

736ST Stainless Steel/Aluminum

736-3 Stainless Steel/Aluminum

736-3ST Stainless Steel/Aluminum

MODEL 736
HEIGHT
11¼″ 286 mm
DRUM DIA
7″ 178 mm
MAX DIA
10⅛″ 257 mm
LINE ENTRY HGT
6″ 152 mm
POWER ADVANTAGE RATING
4950
GEAR RATIO
6.4:1 1st
19.4:1 2d
POWER RATIO
18:1 1st
56:1 2d
WEIGHT*
57 lb 25.9 kg alum/stainless composite
MOUNTING
Bolt Circle Dia 8½″ 216 mm
Fasteners 6 flathead ½″ 12 mm

MODEL 736ST
HEIGHT
12 7/16″ 316 mm
DRUM DIA
7″ 178 mm
MAX DIA
10⅛″ 257 mm
LINE ENTRY HGT
6″ 157 mm
POWER ADVANTAGE RATING
4950
GEAR RATIO
6.4:1 1st
19.4:1 2d
POWER RATIO
18:1 1st
56:1 2d
WEIGHT*
62 lb 28.1 kg alum/stainless composite
LINE SIZE RANGE
½″ - ¾″ 13 - 19 mm
MOUNTING
Bolt Circle Dia 8½″ 216 mm
Fasteners 6 flathead ½″ 12 mm

MODEL 736-3
HEIGHT
11¼″ 286 mm
DRUM DIA
7″ 178 mm
MAX DIA
10⅛″ 257 mm
LINE ENTRY HGT
6″ 152 mm
POWER ADVANTAGE RATING
4950
GEAR RATIO
2:1 1st
6.4:1 2d
19.4:1 3d
POWER RATIO
5.7:1 1st
18:1 2d
56:1 3d
WEIGHT*
59 lb 26. kg alum/stainless composite
MOUNTING
Bolt Circle Dia 8½″ 216 mm
Fasteners 6 flathead ½″ 12 mm

MODEL 736-3ST
HEIGHT
12 7/16″ 316 mm
DRUM DIA
7″ 178 mm
MAX DIA
10⅛″ 257 mm
LINE ENTRY HGT
6″ 152 mm
POWER ADVANTAGE RATING
4950
GEAR RATIO
2:1 1st
6.4:1 2d
19.4:1 3d
POWER RATIO
5.7:1 1st
18:1 2d
56:1 3d
WEIGHT*
64 lb 29.1 kg alum/stainless composite
LINE SIZE RANGE
½″ - ¾″ 13 - 19 mm

*All aluminum drums available January, 1984

BARIENT WINCH GUIDE

Barient manufactures the most complete range of winches in the world for both racing and cruising yachts. The new, expanded WINCH GUIDE will assist you in making the proper winch size selection for your yacht.

Racing vs. Cruising:

Due to our wide range of winches, we are making a distinction between the racing sailor's needs and the cruising sailor's needs. Racing boats are more concerned with quick sail handling; as a result, you will see three-speed winches recommended for them, but two-speed winches for the cruising boat of the same size. Also, since racing boats are pushed harder, in some cases larger winches are recommended for them.

Self-tailing vs. Standard Winches:

As self-tailing winches become more popular, we feel that it is important to list these, since some self-tailing winch sizes are different than standard winches.

Aluminum, Chromed Bronze, or Stainless Steel:

In addition to selecting your winch size, you must also consider the drum material. Aluminum winch drums are heat treated and hard anodized (a must). They are black in color and have the advantage to the racer of being light in weight. DO NOT USE WIRE ON ALUMINUM WINCH DRUMS unless you are prepared to purchase new ones. Chrome-plated bronze winch drums are silver in color and quite rugged. They are suitable for all uses. Stainless steel is the most rugged drum material, compared to aluminum or chrome-plated bronze, and of course never needs rechroming.

Need More Help?

If you require more help in selecting your Barient winches, please hesitate not a moment to contact any Barient Sales Representative, or give us a ring at the factory.

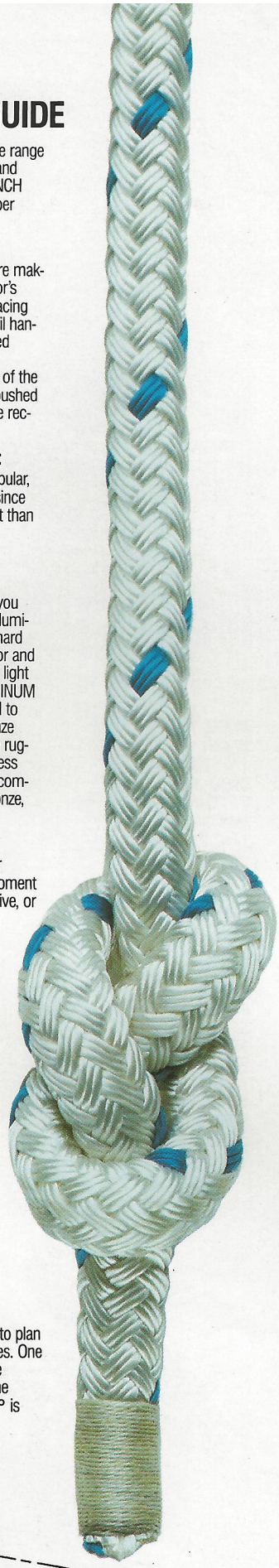

LOA (FEET) LOA (METERS)		
APPROXIMATE SAIL AREA IN SQ. FEET AND (SQ. METERS)		**GENOA MAIN**
GENOA SHEET	RACING	Standard Self-Tailing
	CRUISING	Standard Self-Tailing
SPINNAKER SHEET	RACING	Standard Self-Tailing
	CRUISING	Standard Self-Tailing
MAIN SHEET	RACING	Standard Self-Tailing
	CRUISING	Standard Self-Tailing
GENOA HALYARD	RACING	Standard Self-Tailing
	CRUISING	Standard Self-Tailing
MAIN HALYARD	RACING	Standard Self-Tailing
	CRUISING	Standard Self-Tailing
SPINNAKER HALYARD	RACING	Standard Self-Tailing
	CRUISING	Standard Self-Tailing
SPINNAKER POLE TOPPING LIFT	RACING	Standard Self-Tailing
	CRUISING	Standard Self-Tailing
SPINNAKER POLE FOREGUY	RACING	Standard Self-Tailing
	CRUISING	Standard Self-Tailing
REEF	RACING	Standard Self-Tailing
	CRUISING	Standard Self-Tailing
STAYSAIL HALYARD	RACING	Standard Self-Tailing
	CRUISING	Standard Self-Tailing
RUNNING BACKSTAY MASTHEAD	RACING	Standard Self-Tailing
	CRUISING	Standard Self-Tailing
RUNNING BACKSTAY FRACTIONAL	RACING	Standard Self-Tailing

Barient's improved 8P, 10P, and 10 winches incorporate two important new features:

BARLOCK: A pushbutton release mechanism to allow disassembly and reassembly *without tools.*

BARTRIM: A unique drum design which allows self-trimming for single-handed tensioning.

NEW THREE-SPEED SHIFT MECHANISM

The three-speed winches in this catalog incorporate an improved shift mechanism that allows three-speed winches to be locked into 1st and 2d range for spinnaker or light-air trimming. With a simple push of the shift lever, the winch is set for automatic shifting between 1st, 2d and 3d gears (not available in UK).

WINCH MOUNTING HELP

When mounting winches it is important to plan your deck layout to help prevent overrides. One way to do this is to be sure you have the proper lead angle of the line or wire to the winch drum. For most winches, 3° to 8° is about right.

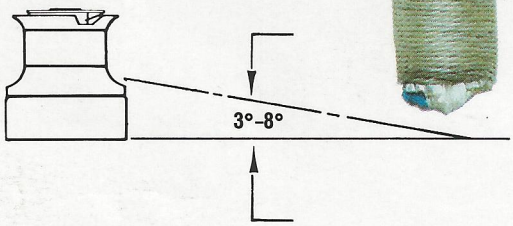

20 to 23 6.0 to 7.0	24 to 26 7.3 to 7.9	27 to 29 8.2 to 8.8	30 to 32 9.1 to 9.8	33 to 35 10.1 to 10.7	36 to 38 11.0 to 11.6	39 to 42 11.9 to 12.8	43 to 46 13.1 to 14.0	47 to 51 14.3 to 15.5	52 to 56 15.8 to 17.1
200 (19) 130 (12)	**250 (23) 160 (15)**	**325 (30) 175 (16)**	**400 (38) 190 (18)**	**470 (44) 215 (20)**	**560 (52) 250 (23)**	**700 (65) 355 (33)**	**900 (84) 410 (38)**	**1,110 (103) 660 (61)**	**1,300 (120) 820 (76)**
10P - 10 7STA	18 19	18/21 19	22 or 24 23	27 27	27 or 28 27 or 28	32-3 or 632-3 32-3	36-3 or 736-3 36-3 or 736-3	736-3 w/Ped 736-3 w/Ped	SYS10 w/Ped SYS10 w/Ped
10P - 10 7STA	12/18 17/19	18/21 19	22 or 24 23	24 27	25 or 27 27	28 or 32 28 or 32	32 or 36 32 or 36	32 or 36 32 or 36	36 36
8P/10P —	10P —	10/12 —	12/18 19	21/22 23	24/27 27	28 or 32 28 or 32	32/36-3 32/36-3	32 or 36-3 32 or 36-3	36-3/736-3 36-3/736-3
8P —	8P/10P —	10/12 —	12/18 19	18/21 19	22 23	24 23/27	25 or 27 27	27 or 32 27 or 32	28 or 32 28 or 32
— —	— —	10P —	10P or 10 —	12/18 19	18/21 19	21/22 19	22/ 23/27	27/28 27/28	27/28 27/28
— —	— —	10P 7STA	10P/10 17	10/18 17	18 19	18/21 19	24/25 23/27	25/27 27	27 27
8P —	8P —	10P/10 —	18 17	18 19	21 19	22 23	24/27 23/27	28 28	28/32 28/32
8P —	8P —	10P/10 7STA	10/18 17	18 17	18/21 19	21 19	22/24 23	25/27 27	28/32 28/32
8P 7STA	8P 7STA	10P 17	10 17	10/18 17	18 19	21 19	22/ 23/27	28 27/28	28 28
8P 7STA	8P 7STA	10P 17	10 17	10 17	18 19	21 19	22 23	25/27 27	27/28 27/28
— —	10P/8P —	10P/10 —	10/18 17	18 19	21 19	22 23	24/25/27 23/27	27/28 27/28	28/32 28/32
— —	8P —	10P —	10/18 17	18 17	18 19	18/ 19/23	22/24 23	25/27 27	28 28
— —	8P 7STA	10P 7STA	10P/10 17	12/18 17/19	18 19	21 19	22/27 23/27	27 27	27/28 27/28
— —	8P 7STA	10P 7STA	10P/10 17	10/18 17/19	18 19	18 19	21 19	22 23	22/24 23
— —	8P 7STA	8P 7STA	10P 17	10/17 17	18 19	18 19	22/27 23/27	27 27	28 28
— —	8P 7STA	10P 7STA	10 17	10/12 17	12 17	18 17	21 19	24 23	27/28 27/28
— —	10P 7STA	10/12 7/17	12/18 17	18 19	21 19	22 23	24/25 23/27	27 27	27/28 27/28
— —	10P 7STA	10 7STA	10/12 17	18 17	18 19	21 19	24/25 23	27 27	27 27
— —	— —	— —	10 —	18 17	18 17	21 19	22/25 23	25 27	28 28
— —	— —	— —	10 —	10 17	18 17	18 17	21 19	21 19	24 23
— —	— —	— —	— —	— —	21 19	24 23	27 27	27/28 27/28	28/32 28/32
— —	— —	— —	— —	— —	21 19	22 19	24 23	27 27	27/28 27/28
— —	— —	18 17	18 19	22 19	24 23	24/27 23/27	27/28 27/28	28/32 28/32	32 32

PAR AND SHEET LOADS

The following formula can be used to calculate approximate sheet loads:

$$\text{SHEET LOAD (lb)} = \text{Sail Area} \times V^2 \times 0.00431$$

where sail area is measured in square feet and V is the apparent wind speed in knots.

To see how this relates to our WINCH GUIDE and PAR, let's look at the primary winch recommendation for a 27 to 29 foot boat which has a No. 1 genoa of 325 square feet. We recommend using a No. 18 or No. 21 winch for this size boat. The No. 18 has a PAR value of 1650, while the No. 21 has a PAR value of 1850.

Assuming that the No. 1 genoa can be carried in 20 knots of wind apparent, the sheet load would be:

$$325 \times (20)^2 \times 0.00431 = 560.3 \text{ lb}$$

To calculate how much you must push on the end of a 10-inch handle to pull in the sail, use the following formula:

$$^{*}\text{ Handle Load (lb)} = \frac{\text{Sheet Load (lb)}}{\text{PAR}} \times 100$$

$$\text{No. 18 Handle Load} = \frac{560 \text{ lb}}{1650} \times 100 = 33.9 \text{ lb}$$

$$\text{No. 21 Handle Load} = \frac{560 \text{ lb}}{1850} \times 100 = 30.2 \text{ lb}$$

Thus it will take 3.7 lb (11%) less force on a standard length winch handle to pull in the sail with a Barient No. 21 than with a Barient No. 18.

*Actual handle load will depend on friction in turning blocks, etc.

—Excerpted from the book, "Designed to Win," by Roger Marshall, published by W.W. Norton.

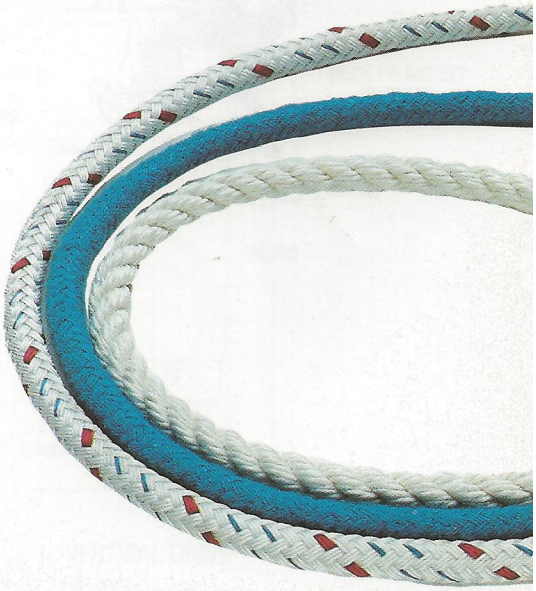

BARIENT POWER WINCHES

The first Barient power winches were introduced to the world in 1959. Today Barient offers 10 different power winch combinations, including self-tailing models. From the deck up they are virtually identical to Barient manual winches, except that the base is slightly higher. The drive motor is positioned below deck and is operated by two foot switches. They may be operated manually by inserting a Barient *lock-in* handle. When the handle is engaged, the electrical motor is mechanically disconnected, which prevents the handle from being accidentally cranked by the motor.

All vertical-motor models feature Barient two-stage epicyclic gear reduction. Models 32, 36, 736 and SYS10 are also available with right-angle drive gear box to allow horizontal mounting of the motor. All mounting and connecting assemblies are sealed for waterproof operation.

All ten power winches are identical in operation, incorporating two speeds, two foot switches, a stainless steel or chrome-plated bronze drum, and a lock-in handle for manual operation. The two foot switches provide high and low speeds by actuating a self-contained solenoid package mounted directly on the motor. The system is simple, and has proven to be trouble-free.

Current draw on Barient power winches is normally limited by an external circuit breaker to 75 amperes on 12-volt systems, and 40 amperes on 24-volt systems. This provides approximately one horsepower output. If more power in first speed is needed, a 150- or 80-ampere breaker (12 volts and 24 volts, respectively) may be used without damaging the system. Up to 2.5 horsepower may thus be obtained.

Winches for 32 to 36 volt systems are available on special request. Also, 3-speed No. 36 and 736 winches can be adapted for power drive.

SYSTEM XX POWER WINCHES

For maxi yacht applications we can equip the Barient System XX winch with power drive. The System XX motor produces 4 horsepower with a 150-ampere circuit breaker. See the Barient Special Products catalog for further details.

36 ST PWC

36 ST PWC WITH RIGHT-ANGLE DRIVE

POWER WINCH MECHANICAL SPECIFICATIONS

CAT. NO.	28	28ST	32	32ST	36	36ST	736	736ST	SYS10	SYS10ST
Drum Dia.—In.(mm)	4(102)	4(102)	4¾(121)	4¾(121)	5¾(146)	5¾(146)	7(178)	7(178)	10(254)	10(254)
Max. Dia.—In.(mm)	8¼(210)	8¼(210)	9½(241)	9½(241)	10¼(260)	10¼(260)	10¼(260)	10¼(260)	13(330)	13(330)
Overall Hgt. (above deck) —In.(mm)	9⅝(244)	10⅞(276)	10⅝(270)	11⅞(302)	11 15/16(303)	13 13/16(351)	11 15/16(303)	13 15/16(351)	11¾(298)	13¾(349)
Line Entry Hgt.—In.(mm)	4½(114)	4½(114)	4⅝(117)	4⅝(117)	6¾(171)	6¾(171)	6⅝(168)	6⅝(168)	6⅛(156)	6⅛(156)
Wgt. (SS or chr drum) —lb.(kg)	62.5(28.4)	63.5(28.9)	79(35.9)	82(37.3)	96(43.6)	101(45.9)	94.5(43.0)	99.5(45.0)	109(50.0)	114(52.0)
Line Speed 1st —Ft./Min.(m/min)	55(16.7)	55(16.7)	72(21)	72(21)	32(9.8)	32(9.8)	39(11.9)	39(11.9)	750(219)	750(219)
Line Speed 2nd —Ft./Min.(m/min)	18(5.5)	18(5.5)	16(4.9)	16(4.9)	11(3.4)	11(3.4)	13(4)	13(4)	52(15)	52(15)
Line Speed 3rd —Ft./Min.(m/min)									15(4.4)	15(4.4)

POWER WINCH ELECTRICAL SPECIFICATIONS

	12 Volt	24 Volt
Recommended Breaker Size (amperes)	75	40
Maximum Breaker Size	150	80
Motor Horsepower with		
Recommended Breaker	.95	1.10
Maximum Breaker	1.48	1.92
Recommended Wire Size: (with recommended breaker, motor to battery)		
Up to 10 feet	#6	#10
10 to 20 feet	#2	# 8
20 to 30 feet	#1	# 6
30 to 40 feet	#0	# 6
(with maximum breaker, motor to battery)		
Up to 10 feet	#4	# 6
10 to 20 feet	#1/0	# 4
20 to 30 feet	#2/0	# 2
30 to 40 feet	#4/0	# 2

Use No. 14 wire for foot switches

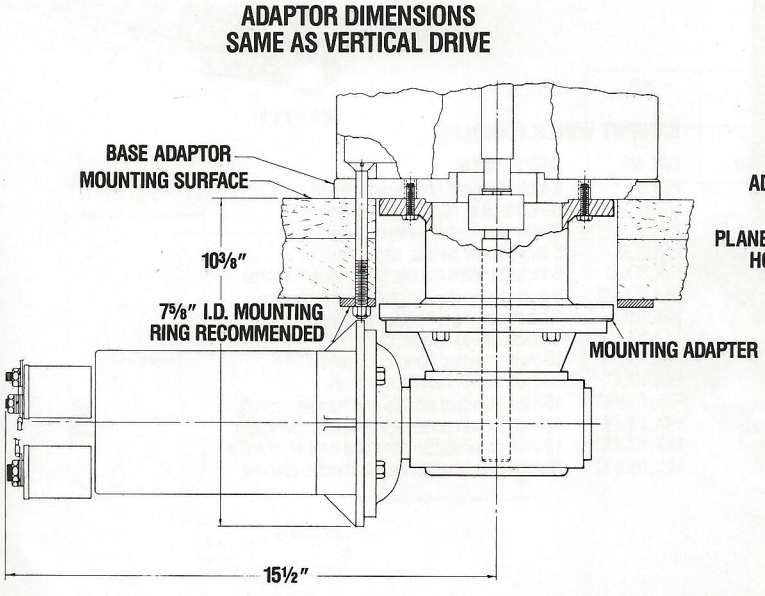

RIGHT-ANGLE DRIVE
(OPTIONAL)

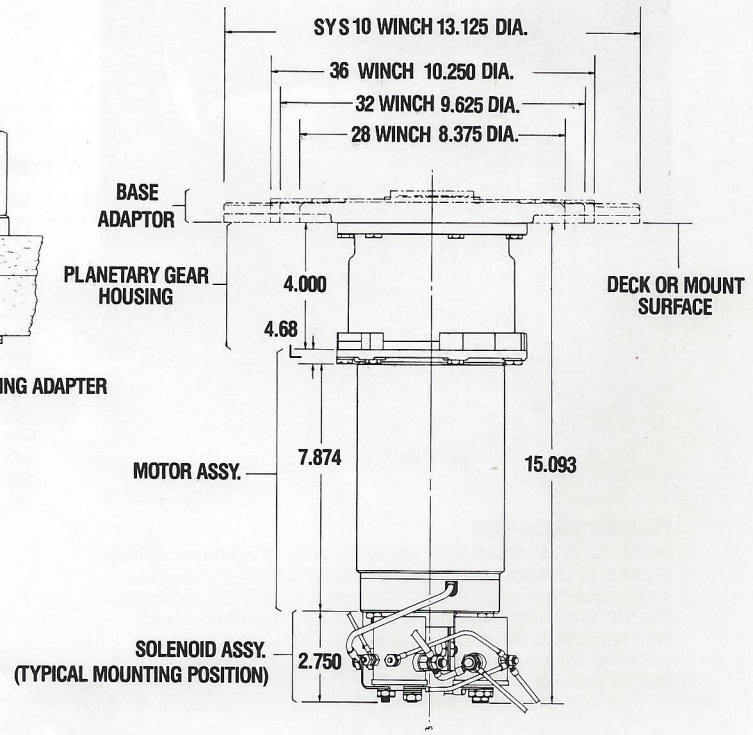

VERTICAL DRIVE

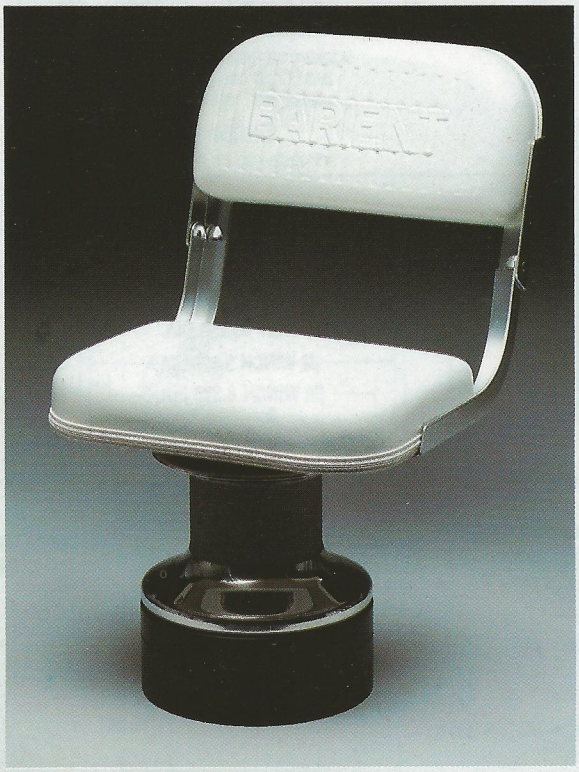

FOLDING WINCH SEAT
Barient's folding winch seat easily inserts into the top of any Barient winch, or any other winch which has adopted the Barient socket size. It is covered in white naugaform vinyl, and has aluminum hinges and stainless steel fastenings. The adaptor plate casting is machined of manganese bronze to the same standards as Barient winch handle studs. With resilient waterproof cushioning, the seat is rugged and durable, and may be the most comfortable place on your deck.

BARIENT WINCH HANDLES

CAT. NO.	DESCRIPTION
HDL8A	8-inch standard handle, aluminum
HDL8LIA	8-inch lock-in handle, aluminum
HDL8C	8-inch standard handle, chrome
HDL8LIC	8-inch lock-in handle, chrome
HDL8DGC	8-inch standard double-grip handle, chrome
HDL8DGLIC	8-inch lock-in double-grip handle, chrome
HDL10A	10-inch standard handle, aluminum
HDL10LIA	10-inch lock-in handle, aluminum
HDL10C	10-inch standard handle, chrome
HDL10LIC	10-inch lock-in handle, chrome
HDL10DGC	10-inch standard double-grip handle, chrome
HDL10DGLIC	10-inch lock-in double-grip handle, chrome
HDL10CMC	10-inch combination standard handle, chrome
HDL10CLIC	10-inch combination lock-in handle, chrome

MAINTENANCE AND SERVICE

Periodic maintenance is recommended to insure proper operation and long life of your Barient products. Parts kits and BARLUBE winch lubricant are available for routine service. The new Barient Drum Nut Tool permits any winch with a drum nut to be disassembled from the top down without additional tools.

KIT NO. 1
For all standard and self-tailing winches except "old style" 35 and 36 2-speed, 19-ST, 2-A and 1 Halyard:

2-0030	Pawls
4-00209	Springs
2-01045-125	Retaining Ring
1-01045-59	Retaining Ring
1-01045-175	Retaining Ring
2-01077-05	Cotter Pins
1-01-205	Cap Screw
1-01-502	Retaining Washer

KIT NO. 2
For 19-ST manufactured prior to 1983:

2-00331	Pawls
4-00215	Springs
2-01045-125	Retaining Ring
1-01045-59	Retaining Ring
2-01077-05	Cotter Pin

KIT NO. 3
All Power Winches:

2-00330	Pawls
4-00209	Springs
2-00311	Pawls
4-00201	Springs
4-00301	Plungers
1-A-01012-01	Seal
1-A-01012-07	Seal

KIT NO. 4
No. 35 and No. 36 2-speed "old style" and 2-A and 1 Halyard:

2-00311	Pawls
4-00201	Springs
4-00301	Plungers

KIT NO. 5
All handles made after Jan. 1979:

2-01045-62	Snap Rings
2-01060-01	Washers
2-22016	Cap
2-01075-03	Roll Pin
2-01144-01	Phillips Head Screw

NOTE: "Old Style" 35 and 36 were produced prior to July 1980.

LIMITED WARRANTY

Barient, Inc. warrants each piece of equipment to be free from defects in materials and workmanship for a period of one year from date of purchase. Any part which proves to be defective in the normal use of the equipment will be replaced without charge. This warranty does not apply to damage resulting from accident, neglect, or misuse, including repairs or alterations made by firms other than Barient, Inc. Barient, Inc. also reserves the right to alter specifications without notice.

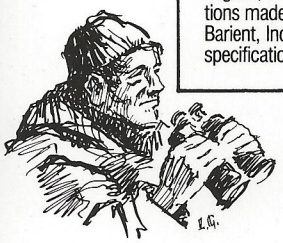

	A	B	C	D	E	F
5/8	3/4D 19mm	5/8D 16mm	1 3/8 35mm	3/4 19mm	1 7/16 37mm	2 9/16 65mm
1/2	1/2D 13mm	1/2D 13mm	1 1/16 27mm	5/8 16mm	1 1/8 29mm	2 1/8 54mm

J-LOCK

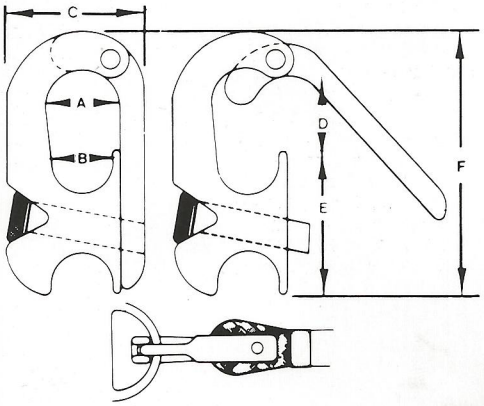

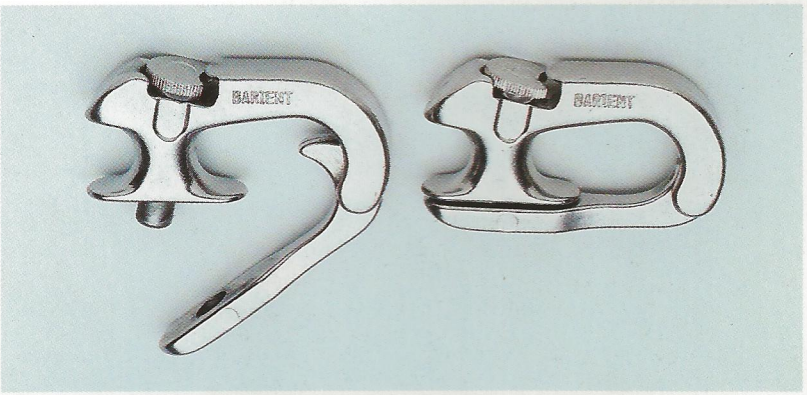

BARIENT J-LOCK
These unique stainless steel devices are used on sheets for quick and foolproof attachment to headsails, permit rapid headsail changes and close sheeting to blocks. Absolutely will not open accidentally when the pin is locked.

WORLDWIDE BARIENT DISTRIBUTION & SERVICE

• AUSTRALIA
Barient Winches
52 Wentworth Street
Granville 2142
NSW Australia
Tel: (02) 637-9333
Telex: 24301

• CANADA
Barient Winches
Unit No. 5
57 Glencameron Road
Thornhill
Ontario L3T 1P3
CANADA
Tel: (416) 881-1370
Telex: 21-06964723

• FRANCE
Barient Winches
Port Les Minimes
17000 La Rochelle
FRANCE
Tel: (46) 445120
Telex: 791240 FBAMAFRA

• GERMANY
Denzel Marine
Flughafenstrasse 5
8900 Augsburg
WEST GERMANY
Tel: (0821) 7003164
Telex: 53899 BDMA

• HOLLAND
Barient Winches
Singel 188
P.O. Box 5184KD Vissingen
HOLLAND
Tel: 01184-15239
Telex: 30175 BARG I

• HONG KONG
Cheoy Lee Shipyards
P.O. Box 80040
863-865 Lai-Chi Kok Road
Cheungshawan
Kowloon, HONG KONG
Tel: 3-7437710
Telex: 56361 CLS

• ITALY
Dott. Roberto Fabbri, S.A.S.
Via Michele Coppino 433
55049 Viareggio
ITALY
Tel: (0584) 394058
Telex: 500337

• JAPAN
Industrial Suppliers Co. Ltd. S.A.
Central P.O. Box 86
Tokyo
JAPAN
Tel: (03) 4030471
Telex: 23408 ISCO J

• NEW ZEALAND
A. Foster & Company Ltd.
32 36 Fanshaw Street
P.O. Box 1951
Auckland 1
NEW ZEALAND
Tel: 33744
Telex: 21157 AK 13

• TAIWAN
Wah Lee Industrial Corporation
238 Lo Ho Second Road
Kaohsiung
TAIWAN
Tel: (07) 2314117
Telex: 71118 WAHLEE

• UNITED KINGDOM
Barient Winches
Clocktower Buildings
Warsash
Southampton S03 6ZG
UNITED KINGDOM
Tel: (04895) 5141
Telex: 477235

• U.S.A.
Barient, Inc.
3641 Haven Avenue
Menlo Park, CA 94025
U.S.A.
Tel: (415) 367-9924
Telex: 345559 YACHT WINCH CA

Barient, Inc.
26 Burnside Street
Bristol, Rhode Island 02809
U.S.A.
Tel: (401) 253-7443

Barient, Inc.
3899 Ulmerton Road
Clearwater, Florida 33520
U.S.A.
Tel: (813) 577-9500

Specifications and features subject to change without notice.

I 5 M 984